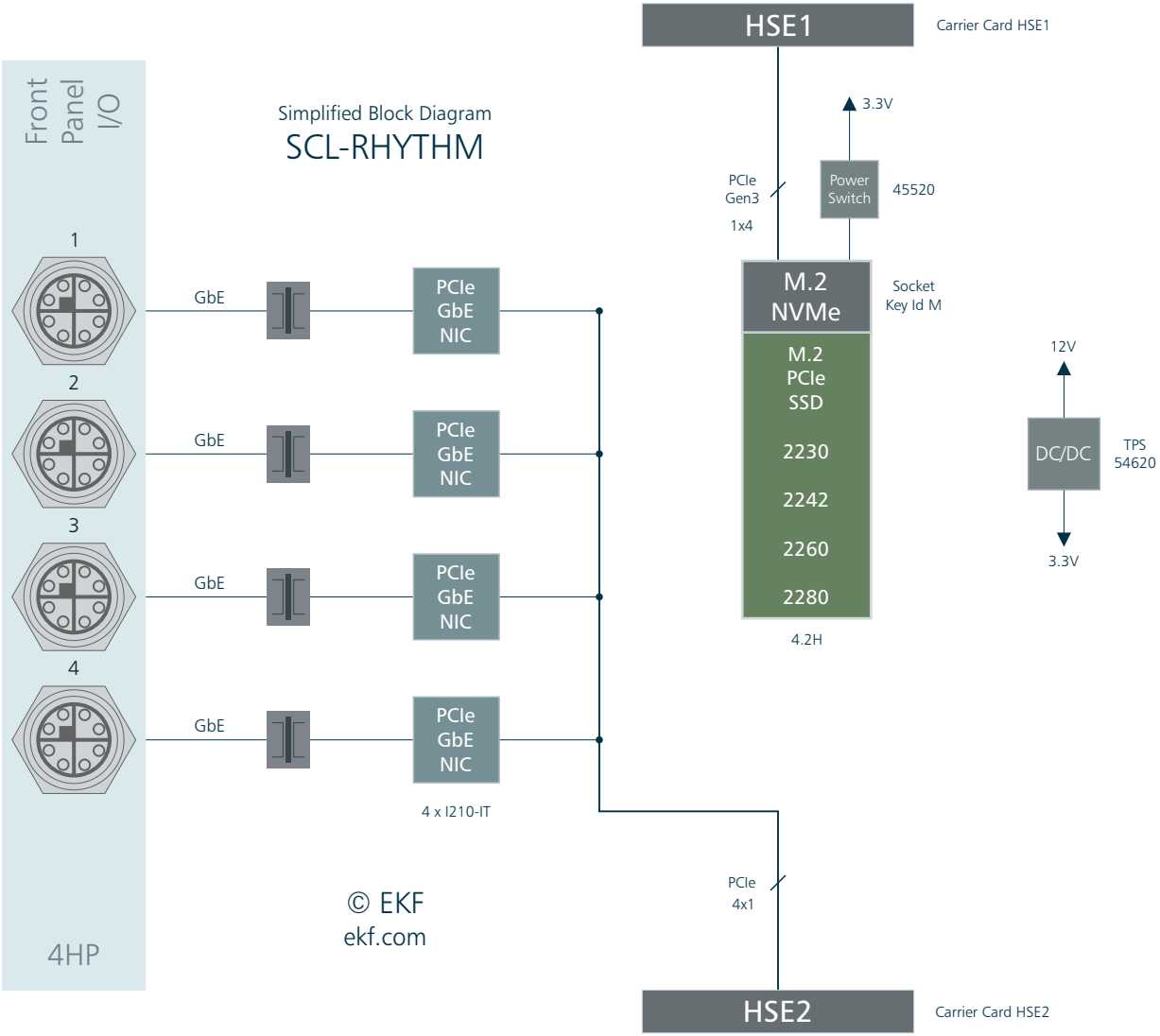
Front Panel I/O
Simplified Block Diagram
SCL-RHYTHM
HSE1
Carrier Card HSE1
3.3V
PCIe Gen3
1x4
Power Switch
45520
M.2 NVMe
Socket Key Id M
M.2 PCIe SSD
2230
2242
2260
2280
4.2H
12V
DC/DC
TPS 54620
3.3V
1
2
3
4
GbE
PCIe GbE NIC
4 x I210-IT
PCIe 4x1
HSE2
Carrier Card HSE2
4HP

© EKF
ekf.com